# One-door Access Controller

## User Manual V2.4

## 1. Specifications:

1.1Technical parameters:

| NO | Item | Value |
|---|---|---|
| 1 | Operating voltage | DC 12V±10% |
| 2 | Operating current | < 100mA |
| 3 | Dimensions | 120×78×22(mm) |
| 4 | Weight | 110g |
| 5 | Ambient temperature | 0℃—60℃ |
| 6 | Relative humidity | 20%—80% |
| 7 | Storage | 1000users |
| 8 | Card type (alternative) | EM(ID) card (IC card for options) |
| 9 | Card reading distance | 1—15CM |

1.2 Factory Default:

| | |
|---|---|
| **Programming Password** | 123456 |
| **Common Access Password** | None |
| **Relay Unlock output** | 5 Seconds |
| **Open mode** | Card or Access Password<br>Access Password include Private Access Password (PIN) and Common Access Password |
| **Security mode** | OFF |
| **Backlight (For options)** | Auto |
| **W26 port (For options)** | Input |

1.3 Light and Sound indicates:

Light: red and green

| Light Description | Indicates |
|---|---|
| Red light flash every 1 sec （Slow flash） | Standby state |
| Green light flash every 0.5sec (Fast flash) | Pending further action |
| Red light is always ON | Programming state |
| Green light is always ON within Open Time | Unlocking state |

Sound：Buzz

| Sound Description | Indicates |
|---|---|
| 1 short buzz | Valid input |
| 3 short buzz | Invalid input |
| 1 long buzz | Programming success |
| Continuous long buzz | Restoring factory programming passwords |

## 2. Installations Guide:

**JP1 terminal:**

| NO | Mark | Color | Function |
|---|---|---|---|
| 1 | +12V | Red | Power+ |
| 2 | GND | Black | Power- |
| 3 | PUSH | BLUE | Low level output |
| 4 | OPEN | Yellow | Door Release |
| 5 | BEL+ | Grey | High level Input |
| 6 | BEL- | White | Voltage output |

**JP2 terminal:**

| NO | Mark | Color | Function | Remark |
|---|---|---|---|---|
| 1 | +12V | Red | Power+ | For options |
| 2 | GND | Black | Power- | |
| 3 | DATA0 | Green | WG DATA0 | |
| 4 | DATA1 | White | WG DATA1 | |
| 5 | NC | Brown | Relay NC output | |
| 6 | COM | Blue | Relay Com output | |
| 7 | NO | Purple | Relay NO output | |

**Wiring diagram:**

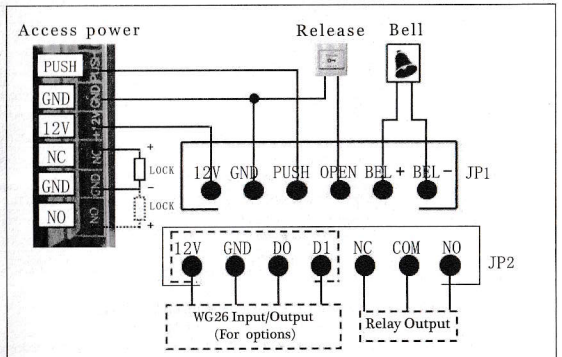


Remark:
If let Relay drive electric-lock, please connect a backward diode with the lock's "+" and "-" poles.

## 3. Programming Guide

### 3.1 Detailed Programming Guide:

Programming Password Default: 123456, all password can be 3~6 digits

| Purpose | | Operations | Instructions |
|---|---|---|---|
| Basic Function | Change Programming Password | # Programming Password # 0 new Programming Password # new Programming Password # | If Programming Password lost, perform 3.2 to reset to Factory Default (123456). |
| | Add user card | # Programming Password # 1 read card # | If add multi cards, read cards continuously |
| | Set Common Access Password | # Programming Password # 21 new Common Access Password # | Common Access Password is only one. Open method: Common Access Password # |
| | Delete all users | # Programming Password # 40 0000 # | Delete all cards and PIN except Common Access Password |
| | Delete user by read card | # Programming Password # 41 read card # | If delete multi cards, read cards continuously |
| Expand Function | Add Private Access Password(PIN) | # Programming Password # 22 PIN # | PIN can be more. Open method: PIN # |
| | Add card by input card No. | # Programming Password # 23 input card No. # | Card No. is 10-digit or 8-digit, machine auto-identify |
| | Add multi-card by input card No. zone | # Programming Password # 24 input start card No. card Qty # | Card Qty is 4-digit (If one-time add twenty cards, input 0020) |
| | Add "card +PIN" | # Programming Password # 3 read card PIN # | If modify PIN, see 3.5 |
| | Delete user by input User ID No. | # Programming Password # 42 input User ID No. # | About User ID No. see 3.4 |
| | Delete user by input card No. | # Programming Password # 43 input card No. # | Card No. is 10-digit or 8-digit, machine auto-identify |
| | Delete user by input PIN | # Programming Password # 44 input PIN # | PIN is 3~6 digits. |
| | Delete all PIN users | # Programming Password # 45 1111 # | Use for PIN users (Do not include Card users and Card +PIN users) |
| | Change Open time | # Programming Password # 5 XX # | XX can be 2-digit, and the max. is 99. If input 00, the signal output time is 0.2 Secs. |
| | Set Open mode | # Programming Password # 6 XX # | XX can be **01**(only Card) / **02** (Card or Access Password) / **03** (Card+PIN) |
| | Reader setting **(For options)** | # Programming Password # 6 04 # | The machine can be used for reader(W26 output) |
| | Security function Setting<br>Anti-dismantle Alarm setting**(For options)** | # Programming Password # 7 XX # | XX can be **01**/ **02**( Security function OFF / ON) and **03/04**(Anti-dismantle Alarm OFF / ON) |
| | | Remark: Security Function ON means System would be locked for 5 Minutes if continue to read illegal cards or input wrong Access Password for 10 times. | |
| | Backlight setting**(For options)** | # Programming Password # 8 XX # | XX can be **01/02/03** (Normal ON / Normal OFF / Auto) |
| | Reset Factory Default | # Programming Password # 8 99 # | Except Programming Password and Manager Card |
| | Set Manager Card | # Programming Password # 91 read MAC read MDC # | First read card is Manager Add Card and Second read card is Manager Delete Card. |
| | Cancel Manager Card | # Programming Password # 92 # | MAC: Manager Add Card, MDC: Manager Delete Card |

### 3.2 To reset to Factory Programming Password（123456）

Step1、Turn off power and connect bin 2&3 of RST(S1)。

Step2、Turn on power and buzzer gives 3 long buzz with green light flash fast。
If need to set Manager Card, now read two empty cards first one as Manager Add Card and Second one as Manager Delete Card with red light flashing and continuous short buzz .

Step3、Turn off power, disconnect bin2&3 and connect bin 1&2 of RST。

Step4、Turn on power again.

### 3.3 How to use Manager Card – MAC&MDC

To add a card user in standby mode: read MAC read new cards read MAC

To delete a card user in standby mode: read MDC read registered cards read MDC

To delete all users in standby mode: read MDC read MAC read MDC

Remark: User cards can be added or deleted continuously.

### 3.4 User ID No. explain

User ID is auto-generating 4-digit number started at 0001. The number increases with adding user one by one and ignores deleting user.

Common Access Password has no ID.

### 3.5 How to change PIN (When open mode: card+ PIN)

After reading card and input corresponding PIN to open the door, within 5 seconds, long press # until the green light flash fast， and then input new PIN # new PIN #, new PIN changed successfully with a long buzz.